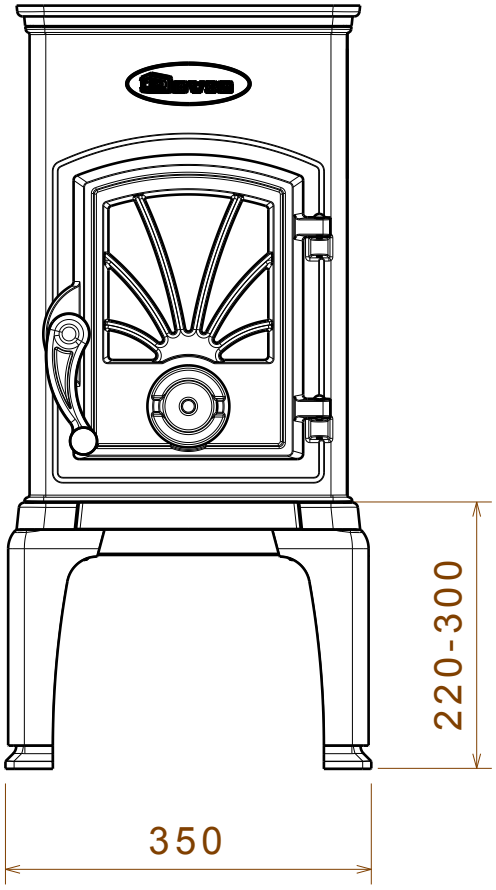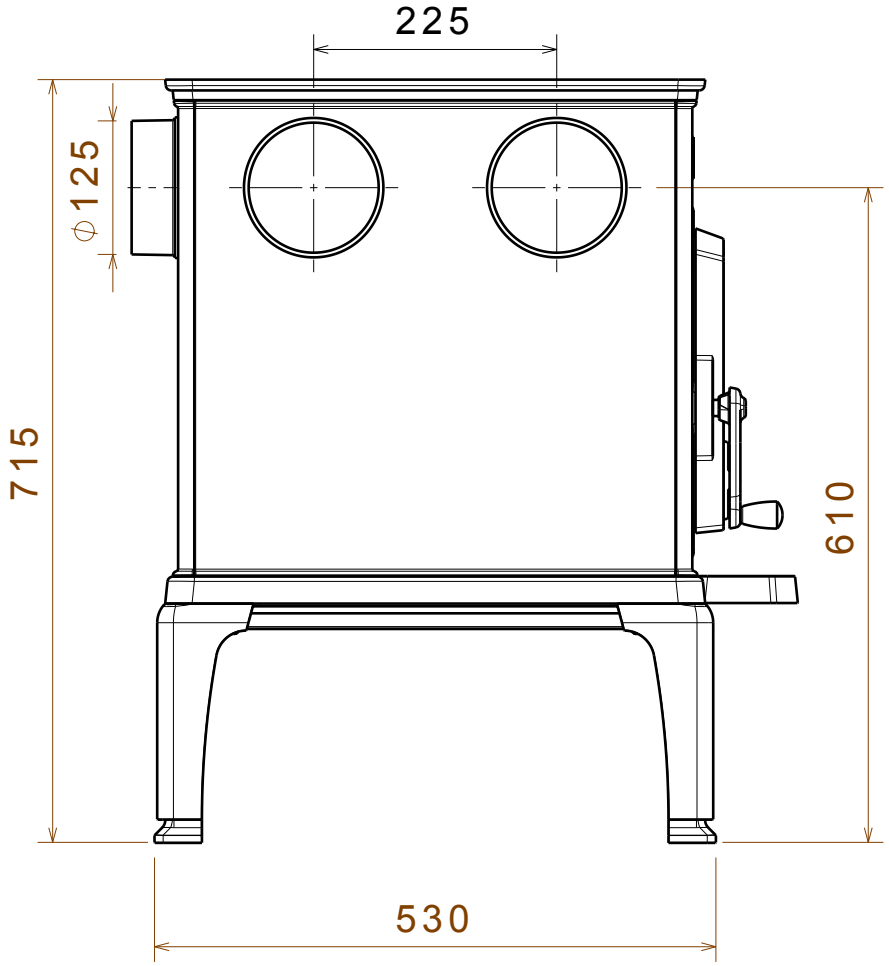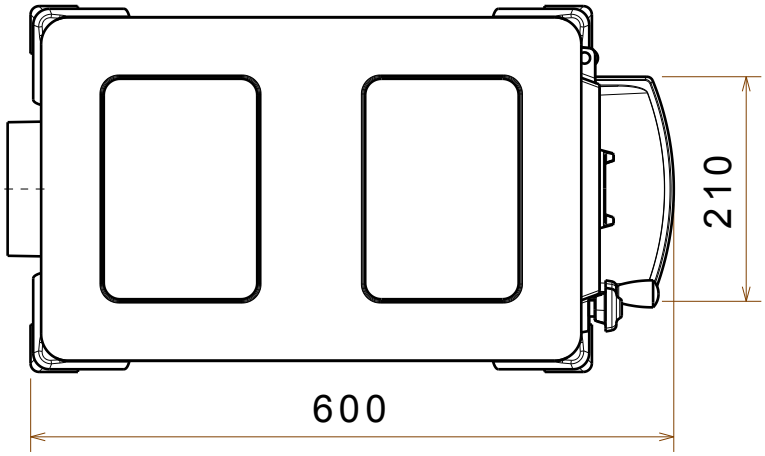# 40CBS