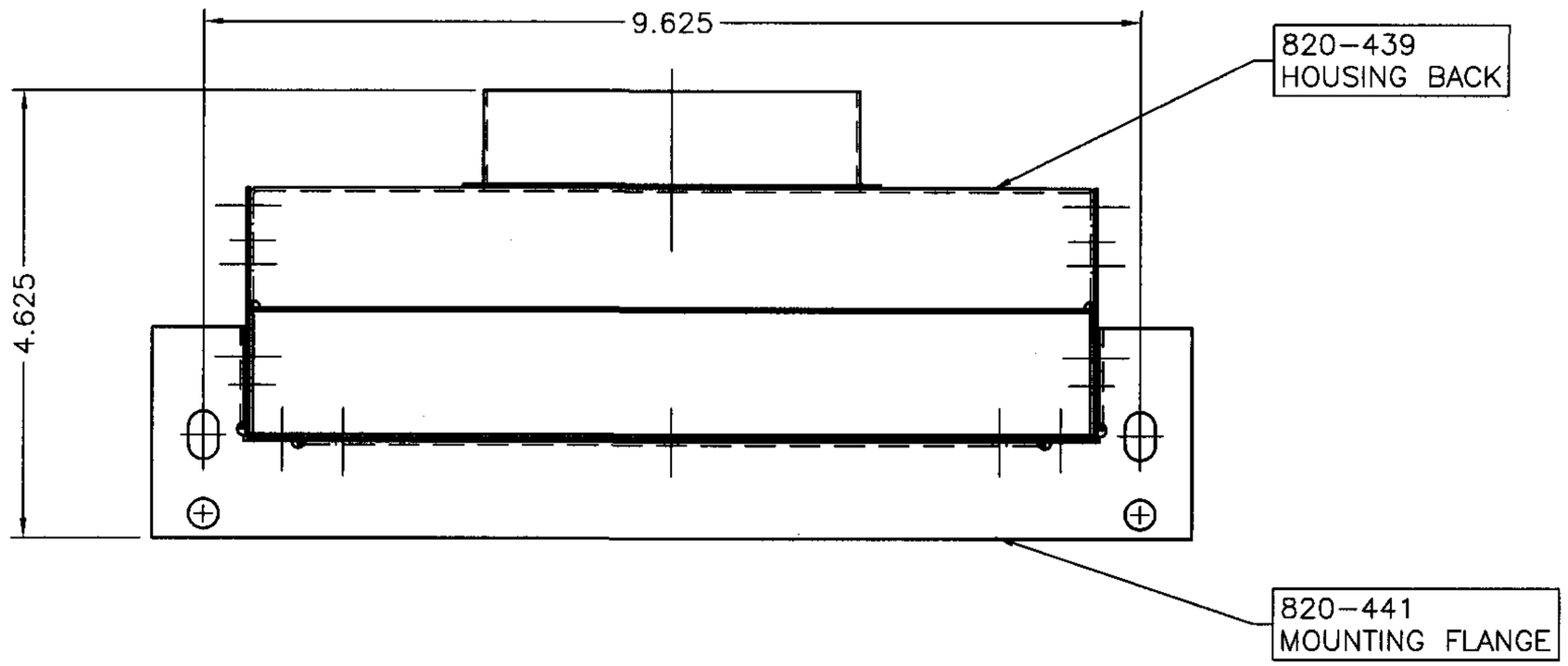

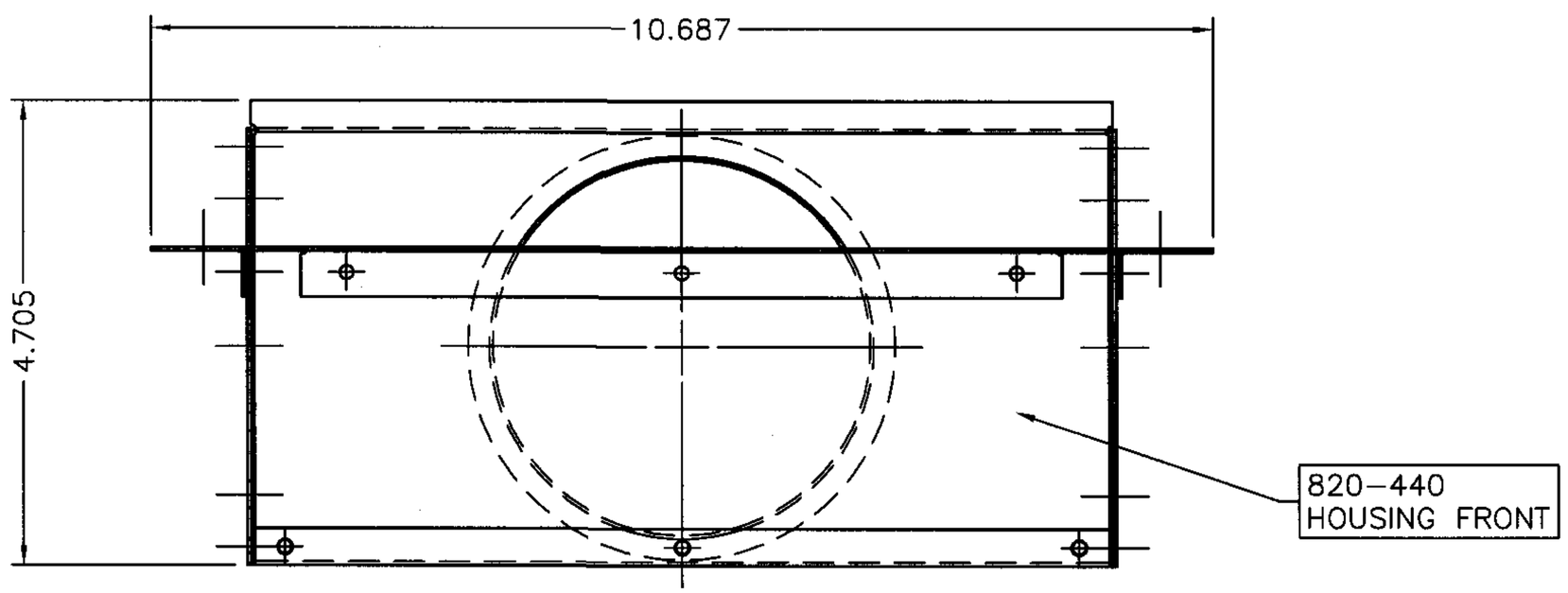

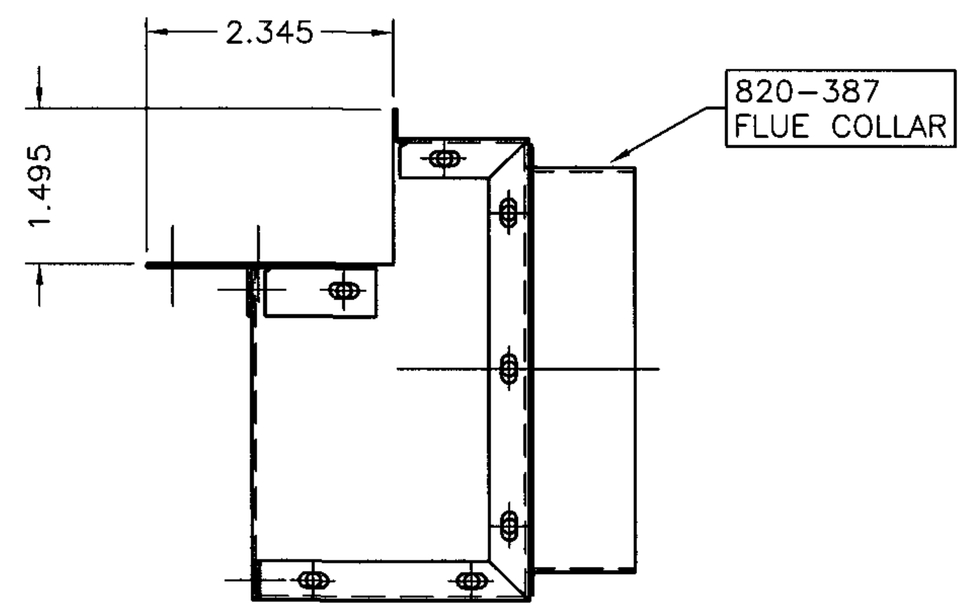

820 outside air kit

		3RD ANGLE PROJECTION	TOLERANCES UNLESS OTHERWISE STATED	FIREPLACE PRODUCTS INTERNATIONAL							
		DO NOT SCALE	ANGULAR = ± N/A DIMENSIONS = ± N/A INSIDE BEND RADII = N/A UNITS IN INCHES	PART : OUTSIDE AIR KIT					DWN	WAYNE THURBER	06 JUL 2005
				MAT'L : N/A	BLANK SIZE : N/A				CHK		
				QTY : N/A–N/A/ N/A–N/A/ N/A–N/A/ N/A–N/A/ N/A–N/A/N/A–N/A					PROCESS : N/A		
			REV.			C.N.	SIGN	DATE	SCALE : 1:2		
H200	1	PART No. 47000	—	CURRENT REVISION	–	–	–	–	47000		
H300	1			PREVIOUS REVISION	–	–	–	–			
MODEL #	QTY.	THIS DRAWING IS THE PROPERTY OF FPI LTD., IT MAY NOT BE COPIED IN WHOLE OR IN PART, OR DISCLOSED TO A THIRD PARTY WITHOUT OUR PRIOR WRITTEN CONSENT.									