OPERATING AND INSTALLATION INSTRUCTIONS

KUBE 10 STOVE

is exemt for use in smoke control areas when burning dry wood.









www.hetaheating.com

ECODESIGN

HETA

EN

DANISH DESIGN . DANISH QUALITY . DANISH PRODUCTION

Congratulations on your new stove. We confident that you will be more than satisfied with your new Heta stove, especially if you follow the advice and instructions we have put together in these operating instructions.

Kube 10 have been approved per the EN 16510-2-1-2022.

These approvals, means that the wood stove meets a variety of specifications and requirements, ensuring it is made of quality materials, minimum environmental impact and that it has an optimum fuel economy.

The Kube 10 is recommended as exempt for use within smoke control areas (SCA) throughout the UK (see clean air act Appendix A). of the air supply regulation so that it can't be closed completely.

The above declared values apply to all variants of the Kube 10 series.

Operating Instructions Contents

Before installation 3-4
1. Operating instructions 5
1.1 Before using 5
1.2 First firing 5
1.3 Regulating the airflow 5
1.4 Lighting the stove 5
1.5 Refueling 5
1.6 Emptying the ash 6
1.7 Reduced burning 6
1.8 Risk of explosion 6
1.9 Draft conditions in the chimney 6
1.10 Fuel 7
1.11 Operating problems 8
1.12 Chimney fire 8
1.13 Maintenance 9
1.14 Cleaning the glass 9
1.15 Lubricate the moving parts of the stove 9
1.16 Stove data table 9
1.17 Diagram for maintenance 10
1.18 Garantee 10
1.19 Troubleshooting 11
1.20 Cleaning/Replacing bicks after chimney sweeping 12
1.21 Parts 13
2. Installation Instructions 14

Heta A/S
Jupitervej 22,
DK-7620 Lemvig
Phone: +45 9663 0600
E-mail: heta@heta.dk

Copyright © 2014
Heta is a registered
trademark of Heta A/S

Printed in Denmark
Subject to printing errors
and changes.

30.04.2026
0037-1636 Version 1,0

BEFORE INSTALLATION

Heta wood stoves are quality products, therefore, your first impression is very important! We have a good logistics network, which transports Heta products with great care for our dealers. Nevertheless, when in transport or handling, damage of the often-heavy stoves can occur. It is important that upon receipt check your Heta product completely and report any damage or defects to your dealer.

The packaging must be disposed of as follows:
Wood is untreated and able to burn in the stove.
Plastic and cardboard you can drop off at your local recycling center.

Unpacking the stove

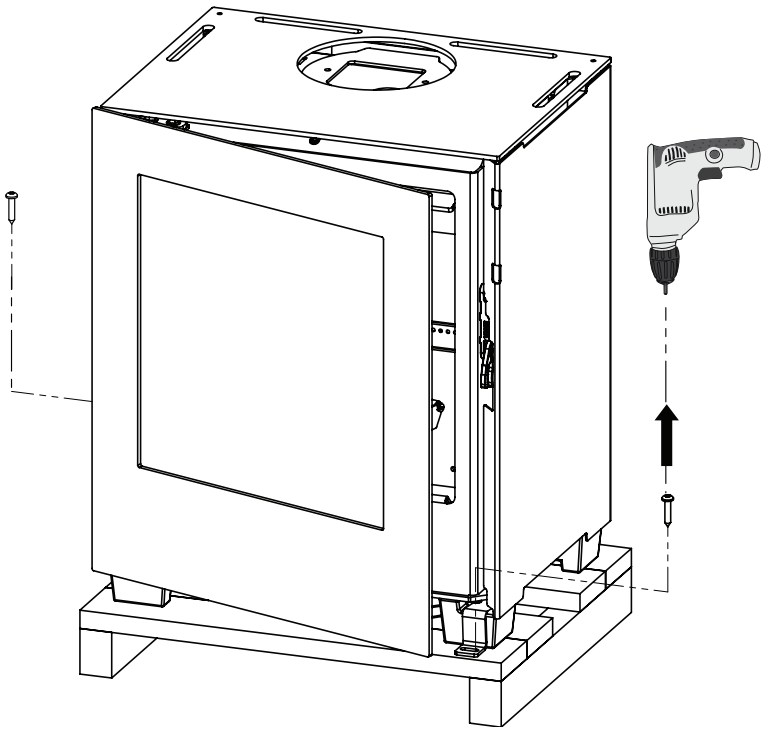

S.C.A for Kube 10

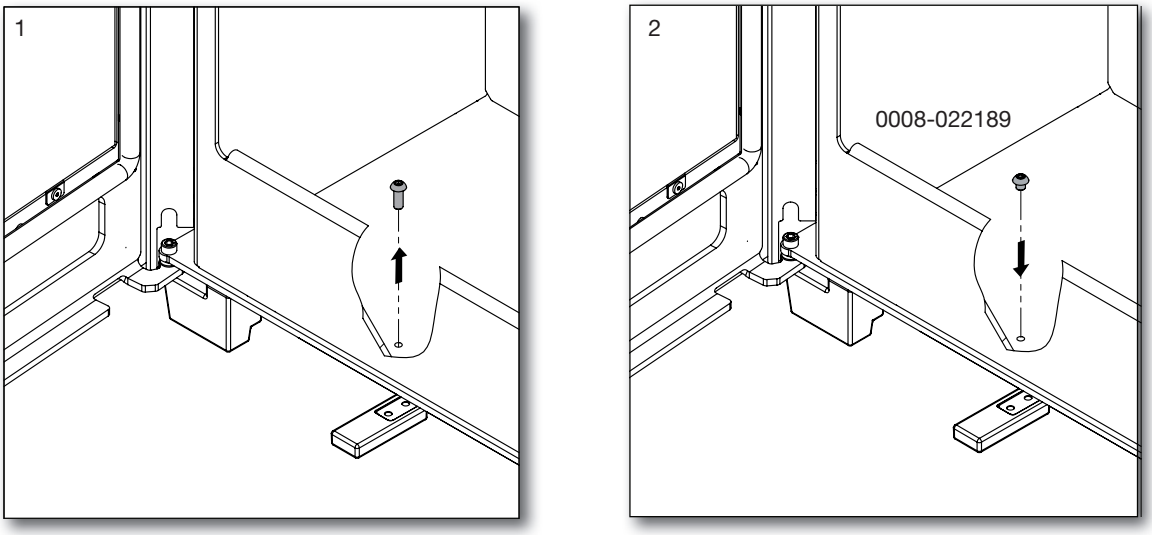

The permanent stop is installed, the stop must not be removed in smokecontrol areas, otherwise an offence will be committed if the appliance is used without the permanent stop in place.

With your new wood stove you should find the following:

Operating / Instruction manual		Q.C. check	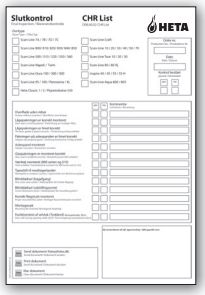
Heta glove Nr. 0023-9002		Flue collar 4025-0007 2 x M6 x 20 0008-1114	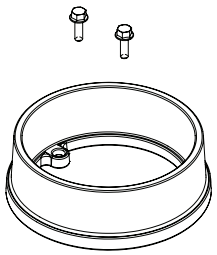
Data plate	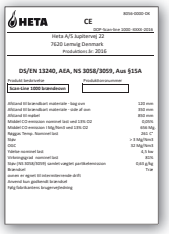	Reduction to external air 0016-029654	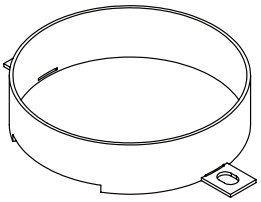
Stove door handle 1 x 6000-031892 3 x 0006-0036	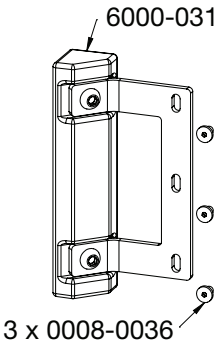	Air regulating screw 1 x 0008-022189	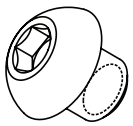
Air regulating handle 2 x 0008-0212 1 x 0030-030958	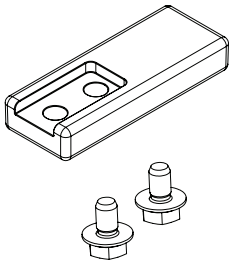	Graphite spray for lubrication 0027-0130	

Required tools are not supplied.

1. OPERATING INSTRUCTIONS

1.1 Before using

Before the wood stove is used make sure required installation conditions, are met.

See page 14.

Mounting of handle

1

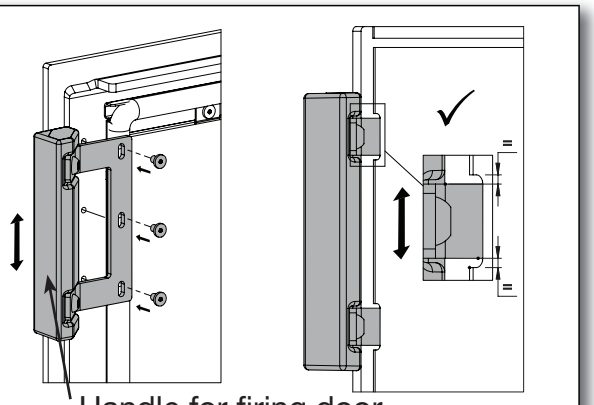

Mounting of air regulating

2

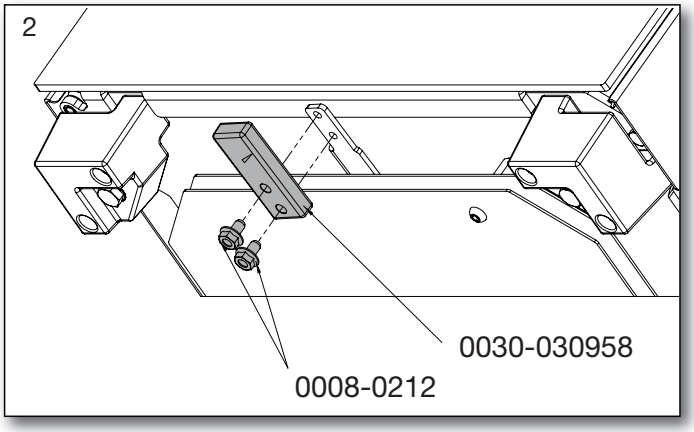

1.2 First firing

The stove paint is fully cured from the factory, but a minor unpleasant odour could still arise.

1.3 Regulating the air flow

The stoves combustion air is regulated by means of a handle below the firing door. See fig. 3.

3

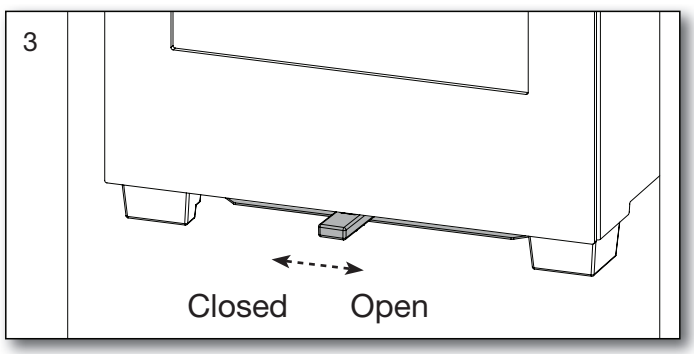

The Kube 10 stoves are designed and tested to burn extremely cleanly with very little smoke discharge and are exempt for use in smoke control areas throughout the UK when burning dry wood logs. To comply, a permanent stop is fitted to ensure that the air control slider cannot be closed beyond 45% for Kube 10 of its fully open position. A permanent amount of air will therefore enter the firebox to feed the fire producing negligible amounts of smoke and unburnt hydrocarbons. The appliances will only be considered as an exempt appliance if this stop is in place.

Use the glove when regulating the conbustion air. The handle will be hot.

1.4 Lighting the stove

Place two pieces of wood on the bottom. Stack kindling on top in layers with air between. Set ting fire starter (bag, brick, paraffin) on the top, now you are ready to light the fuel. The flames must work from the top down. See fig. 4.

4



The use of lighter fluid, oils or any liquid fuels is strictly forbidden from use in a wood stove.

Fully open the combustion air and leave the door ajar (about 1 cm open).

Once the fire is established and the chimney is hot (after about 3-5 minutes) closed door and regulate the air into operating position. We recommend, all of the first fuel is burned with the combustion air fully open in the operating position. This ensures the stove and chimney are thoroughly heated.

Startup/Lighting
Scan the code and select a language.

1.5 Refueling

Refueling of your stove should be done while there is still a good layer of embers. Distributethe embers with the majority of them to the front. Place pieces of wood equivalent to about 0.8 kg on top of the embers perpendicular to the door. See fig. 5.

5



Now open the combustion air completely. If the stove and/or chimney cools down too much, itmay be necessary to have the door ajar.

The wood will then ignite within a very short time (Typically 1 to 3 minutes). Once the fuel is Ignited. Close the door and regulate the air back to operating air. When the fire is well established, you can now regulate the operating air to the desired combustion level.

The nominal output for:
4.0 kW is equivalent to a firing interval of approx. 40 minutes at 45,3% open combustion air and 0.8 kg of wood.

The door must be closed during operation.

Ensure when refueling that the wood is not too close, it will cause poorer combustion, less heat out-put and lower efficiency.

The fuel load, must be maintained below the top series of air holes and within the outer vent in each side. Fig. 6.

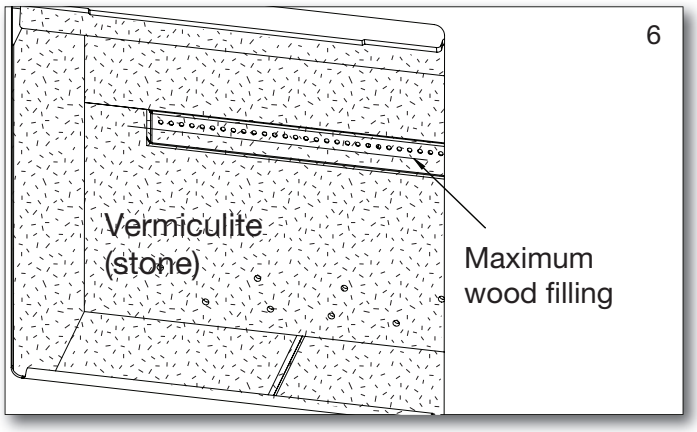

6

When refueling be careful to place the fuel into the combustion cham ber gently, (use the provided glove).

By not doing so you risk cracking or breaking the vermiculite.

If there is reduced draft in the chimney, we recommend opening a window at stoking. This will give better ventilation to the room and more oxygen for combustion.

When filling, the maximum amount of wood must not exceed 1.3 kg If this amount is exceeded, the warranty will be void.

1.6 Emptying the ash

It is advantageous to leave a layer of ash in the bottom of the combustion chamber on top of the grate as insulation.

Be careful when emptying the ashes out. There can be hot embers left for a long time.

Never empty ash into a combustible container.

1.7 Reduced burning

The stove is, approved for intermittent use.

Never turn down the air down so much that there does not come any flames from the tree. Wait to close the air until the flames haveburnt out and the tree is transformed into glowing charcoal.
If you are looking for less heat out-put, achieve this by fueling with smaller volumes of wood and a lower operating air. You may not completely close the operating air during firing. Be aware that the stove will naturally soot if the operating air is too low. This is not good for the environment. There is also a risk for the glass, the chimney and other parts will become sooted. By a combination of the above and possibly burning damp wood. Can lead to high levels of soot that it becomes sticky. Causing the sealing of the door to tear off when opening the door the next day.

Never use the stove if the seals are loose.

1.8 Explosion!!!

It is very important never to leave The stove after start up or refueling, before the fire is established. (Typically 1/2 -1 minutes)

Explosion hazard may be possible, if filled with too much wood on the stove and the air supply is to low. As large amounts of gas are being developed and this may cause a flue gas explosion.

Warning!

One must always use cation around the stove seen, as it gets very warm during use. (In excess of 90° C).

Children should avoid contact with the stove.

Setting up a fence if you have small children may be necessary.

Do not place flammable objects like drying racks, furniture, curtains too close to the stove.

1.9 Draft conditions and the chimney

Poor draft will not allow the stove to burn, as itshould. The glass can soot, requires cleaning of the chimney more often, smoke can escape out when the door is open and it gives poor fuel efficiency. Leading to unnecessary polluting of the environment.

Good draft will allow the stove to achieve optimal combustion and the highest possible efficiency. Heta wood stoves are constructed so that it itself provides an optimal blend of combustion air. This provides a high efficiency/heat, clean glass and low environmental impact.

Minimum chimney draft: 12 pascal.

It is the draft that the stove has been tested and approved on. The minimum draft is necessary to provide clean burning, beautiful flame picture, as well as achieving the rated efficiency.

There is a risk of smoke escaping into the room if the door is opened during vigorous firing, or if there is a lack of air supply to the room, for ex. if an extraction fan is in use.

Flue gas temperature at nominal output is 260°C.

Flue gas flow is:
3,3 g/sek. Corresponding to 11,9 m^3/hr of combustion air by burning 0.8 kg of wood.

The chimney height and diameter, as well as the temperature difference between the flue gas and outside temperature generates the chimney draft. Chimney insulation is therefore important as new efficient stoves create lower flue temperatures. Wind and weather conditions also influence draft, in some cases it may be disadvantageous wind direction, combined with the position of the chimney can cause negative draft (it blows through the chimney), causing smoke escape from the stove.

Before using after a long period of inactivity, check that the chimney is free for any blockages. (soot build-up, bird nests, leaves etc.).

Reduced draft can occur when:

- The temperature difference is too small between smoke gasses and outdoor temperature, for eg. poorly insulated chimney
- To short of a chimney
- The outside temperature is high, and indoor temperature is low for eg. in summer
- False air in the chimney
- Chimney is blocked
- Air tight house (lack of combustion air supply)
- Poorly placed chimney for the surroundings, for ex. the ridge and trees may cause turbulence

Good draft occurs when:

- The difference in temperature in the chimney (warmer) and outside temperature (colder)
- It is clear weather
- The chimney has the right height min 4 meters above the stove, and clear of the roof ridge.

7

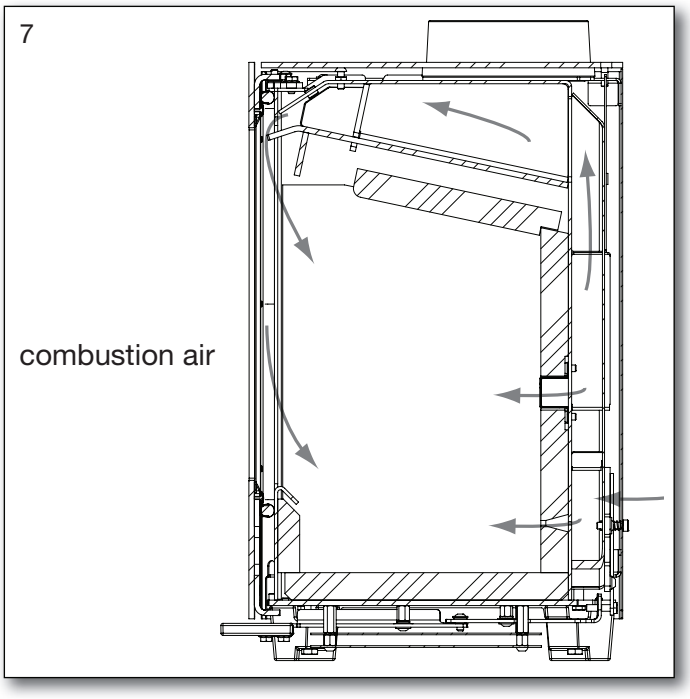

1.10 Fuel

Your new stove is EN approved for firing with wood fuel. You must therefore only burn clean, dry wood in your stove. Never use your stove to burn driftwood, as this may contain a lot of salt which can damage both the stove and the chimney. Similarly, you must not fire your stove with refuse, painted wood, pressure-impregnated wood or chipboard, as these materials can emit poisonous fumes and smoke.

Correct firing using well seasoned wood provides optimal heat output and maximum efficiency. At the same time, correct firing prevents environmental damage in the form of smoke emissions and reduces the risk of chimney fires. If the wood is damp and inadequately seasoned, a large proportion of the energy in the fuel will be used to vaporize the water and this will all disappear up the chimney. Thus, it is important to use dry, well seasoned wood, for eg. wood with a moisture content of less than 20 %. Achieve this by storing the wood for 1–2 years before use.

Pieces of firewood with a diameter of more than 10 cm should be split before before storing. The pieces of firewood should be of an appropriate length (approx. 30 cm) so that they can lie flat on the bed of embers. If you store your wood outdoors, it is best to cover it.

Examples of fuel values

for different woods and their typical densities per cubic meter, specified for 100% wood with a moisture content of 18%.

Wood	kg/m^3	Wood	kg/m^3
Beech	710	Willow	560
Oak	700	Alder	540
Ash	700	Scotch pine	520
Elm	690	Larch	520
Maple	660	Lime	510
Birch	620	Spruce	450
Mountain pine	600	Poplar	450

It is advised not to use oil-containing woods like teak tree and mahogany, as this can cause damage to the glass.

Heating value in wood

You have to use about 2.4 kg normal wood to replace one litre of heating oil. All woods have almost the same heating value per kg, which is about 5.27 kW/hour for absolute dry wood. Wood with a moistness of 18% has a efficiency of about 4.18 kW / hour per kg, and one litre heating oil contains about 10 kW / hour.

CO_2 release

At combustion 1000 litres of heating oil forms 3.171 tons CO_2. As wood is a CO_2 neutral heat/energy source, you save the environment about 1.3 kg CO_2 every time you have used 1 kg normal wood.

1.11 Operational problems

The chimney must be swept at least once a year, we recommend the use of a NACS (national association of chimney sweeps) registered chimney sweep.

In the event of smoke or malodorous fumes are being produced, you must first check to see whether the chimney is blocked.

The chimney must, of course, always provide the minimum draft necessary to ensure that it is possible to regulate the fire. Please note, how-ever, that chimney draft is dependent on the weather conditions. In high winds, the draft can become so powerful that it may be necessary to fit a damper in the flue gas pipe to regulate the draft.

When cleaning the chimney, soot and other deposits may come to fall on the baffle plate, remove and clean it. In cases where the wood burns too quickly, this may be due to excessive chimney draft. You should also check to make sure that the door seal and ash pan seal is intact and correctly fitting.

If the stove it generating too little heat, this may be because you are firing with wet wood. In this case, much of the heating energy is used to dry the wood, resulting in poor efficiency, potentially damaging the vermiculite and an increased risk of soot deposits in the chimney.

1.12 Chimney fire

In case of a chimney fire, which often results from incorrect operation/maintenance or prolonged use of damp wood, close the door and the air supply completely, to help slow/smother the fire.

Call the fire department. The stove and chiminey must be inspected before use again.

1.13 Maintenance

The surface of the stove is treated with a heat-resistant paint. The stove should be cleaned with a damp cloth.
Any damage to the surface in the form of chips or scratches can be repaired using touch-up paint, which is available in spray cans.

1.14 Cleaning the glass

Incorrect firing, for example using wet wood, can result in the viewing window becoming covered in soot.

This can be removed easily and effectively using glass cleaner applied using a cloth.

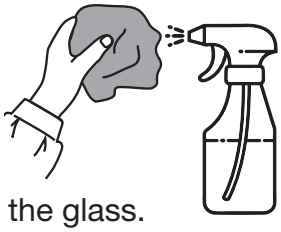

Never apply spray directly to the glass.

1.15 Lubricate the moving parts of the stove with graphite spray

Before using graphite spray, you should cover the exposed surfaces so that lubricants are applied only to the moving parts.

Always test the graphite spray on a hidden surface to make sure the can is working as intended.

Graphite spray should only be used on a cold stove.

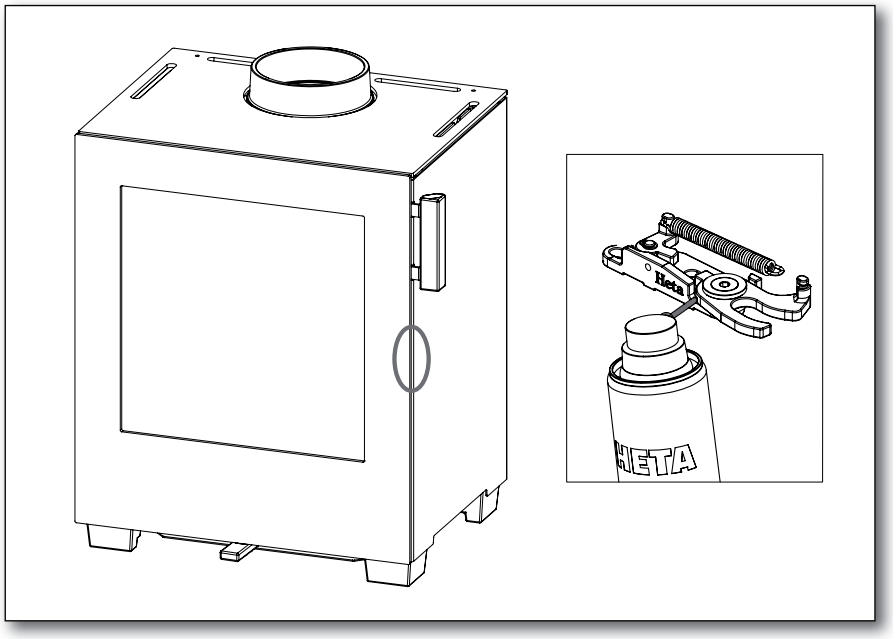

1.16 Stove data table in accordance with EN 16510 testing

Tested as a freestanding stove and with uninsulated flue

Stove type	Nominal fluegas temperature, at 20°C room temperature	Flue	Fuel volume	Draft min.	Nominal output tested	Actual effi-ciency	Distance to flamable materials			Stove weight
							at the sides	rear the stove	to furnitures	
	C°	mm	kg	mbar	kW	%	mm	mm	mm	kg
Kube 10	260	ø125	0,8	0,12	4,0	84	400	275	1000	*

The nominal output is the output to which the stove has been tested.
Testing is conducted with the combustion air around 45,3% open.

* Kube 10 Standard = 63 kg
* Kube 10 with log store (Accessories) = 78 kg
* Kube 10 Classic (Accessories) = 65 kg
* Kube 10 Modern (Accessories) = 65 kg

1.17 Diagram for the maintenance

	Stove Owner					Qualified Technicia	
Maintenance / Period	Before Autum	Daily	1 week	30 days	60-90 days	1st Year	2st Year
Cleaning the chimney (see. Chimney)	C						
Cleaning the chimney and stove	C				C		
Cleaning the stoves firebox	C	VI			C		
Cleaning combustion air intake	C				C		
Cleaning of the firebox	C		VI	C			
Checking / switch, gasket for door	C/S	VI					C/S
Checking / changing, gasket for glass	C/S	VI					C/S
Checking / changing gasket for flue pipe	C/S	VI					C/S
Checking / changing vermiculite	C/S	VI					C/S
Lubricate hinges	L	VI			L		
Lubricate lock	L	VI			L		

For the lubricant used a heat-resistant product. (300c)
C = Cleaning
C/S = Checking /Switch
L = Lubricate
VI = Visual Inspection, pos. cleaning/replacing/adjusting

1.18 Guarantee

Heta wood stoves, are subjected to a strict quality control during production and before delivery to the dealer. Therefore, the duration of the warranty is **5 years** on this product, covering manufacturer's defects, **2 years** on electronic components**.** In addition, there is a **3-month** goodwill warranty, on gaskets, vermiculite and glass from the date of sale from the shop. Photos of the damaged parts must be sent for review.
Claims concerning stoves older than **3 months**, will be assessed by our quality team on a one-by-one basis. Report all claims to your approved / authorised HETA dealer, who in turn will contact Heta to solve the claim. Any stoves purchased online or via a 3rd party carry a standard 1-year warranty with engineer visits & parts being chargeable. To file a claim please provide date of installation, picture of the silver data sticker, model and a description of the issue and pictures.

The guarantee does not cover:
- Wearing parts / fragile parts such as:
- Vermiculite elements in the combustion chamber.
- Glass
- Seals
- The cast bottom or shaking grate
- Surface or paint deteriorations due to excessive humidity, salinity or other aggressive environment
- Damage caused by improper use
- Transportation costs for warranty repair
- Assembly / disassembly of warranty repair
- Any secondary damages of the stove or it's environments due to negligence of any initial damages whether this damage is covered or not by the manufacturers guarantee.

Warning



Inadequate installation, unauthorized alteration to the stove or the use of non-original parts will void the guarantee.

1.19 Troubleshooting table - applies to all stove types

Fault	Cause	Troubleshooting	Solution
Lighting problems. When the stove is cold, smoke seeps into the room. Once the combustion chamber has heated up, the stove burns well.	Inadequate chimney draft. The chimney only has sufficient draft when it is hot.	You can test using a lighter whether flame is drawn into the combustion chamber.	Improve the chimney.
The stove burns poorly after the warm-up phase, and the glass slowly soots up.	Soot in the flue pipe.	Check the flue pipe regularly, as the problem arises slowly.	Clean regularly, and limit the use of horizontal flue pipes. Do not use firewood which generates large quantities of ash.
If the stove burns poorly after start-up, and the glass slowly soots up.	Inadequate chimney draft.	The fault usually already occurs during lighting. Measure the chimney draft.	Improve the chimney draft.
	Insufficient air supply.	Check the air supply.	Read the operating instructions and instruct all users.
	Damp wood.	Use clean, dry wood with a maximum moisture content of 20%.	Firewood should ideally be dried for at least one year after splitting.
	Firewood pieces too large.	Optimal size – see the section for firewood, max. diameter 10 cm.	Use smaller pieces of firewood.
	Insufficient air supply to the room. Range hoods, airtight windows, etc.	Ensure there is sufficient fresh air supply, open a window, check the outdoor air supply.	Depending on the cause, windows must be opened or the outdoor air connection cleaned.
	Insufficient air supply to the room. Range hoods, airtight windows, etc	Ensure there is sufficient fresh air supply, open a window, check the outdoor air supply.	Depending on the cause, windows must be opened or the outdoor air connection cleaned.
The vermiculite in the combustion chamber is becoming very worn.	Wood and flue gases wear down the vermiculite.	Investigate whether the wear is normal.	Normal wear and minor cracks are of no significance. It should be replaced when the steel of the combustion chamber is visible.
Too rapid combustion.	Too much chimney draft.	To test, you can open the cleaning hatch, but remember to close it again.	Measure the chimney draft and install a damper in the flue pipe if necessary.
	The door or ash pan/drawer seal is defective.	While cold, close a piece of paper in the door – the seal should hold the paper gently in place so it does not fall out by itself. Normal wear.	Replace the seal.
The vermiculite in the combustion chamber is cracked.	Shocks or impacts while adding firewood.	Normal wear	Cracks only have cosmetic significance. Replace when the steel of the combustion chamber is visible.
Steel surfaces in the combustion chamber have oxidised.	The temperature in the combustion chamber is too high.	Unsuitable fuel is being used (such as coal). Check the quantity of firewood being used, read the operating instructions.	If there are clear cracks or weaknesses in the stove body, it must be replaced.
The stove whistles	Too much chimney draft	To test, you can open the cleaning hatch, but remember to close it again.	Install a damper.
The stove 'clunks'	Usually due to tension in the metal plates.	Generally only occurs while heating up and cooling down.	Adjust the metal plates.
The stove ticks	Normal expansion and contraction due to temperature changes.	A normal sound.	Ensure that the temperature in the combustion chamber is as constant as possible.
The stove creaks.	The temperature in the combustion chamber is too high.	Use less firewood. Also check the seal in the ash pan/drawer.	See the operating instructions.
The stove smells. The surface is steaming.	The paint on the stove surface is not yet fully hardened.	See the operating instructions regarding the first firing.	Ensure there is sufficient ventilation.
Condensation in the combustionchamber.	Moisture in the vermiculite.	Check the condition of the vermiculite.	Evaporates by itself after the stove has been lit a few times.
	Damp wood.	Measure the moisture content.	Use dry firewood.
Condensation from the flue pipe.	The pipe is too long or the chimney is too cold.	Check the flue pipe's length and heat loss.	Improve the flue pipe, insulate the chimney.
	Damp wood	Measure the moisture content.	Use dry firewood.

1.20 Cleaning after sweeping or before replacing vermiculite stones

Note: it may be necessary to clean/vaccum the holes and air ducts behind the rear stone.

Order of removing Fire bricks.

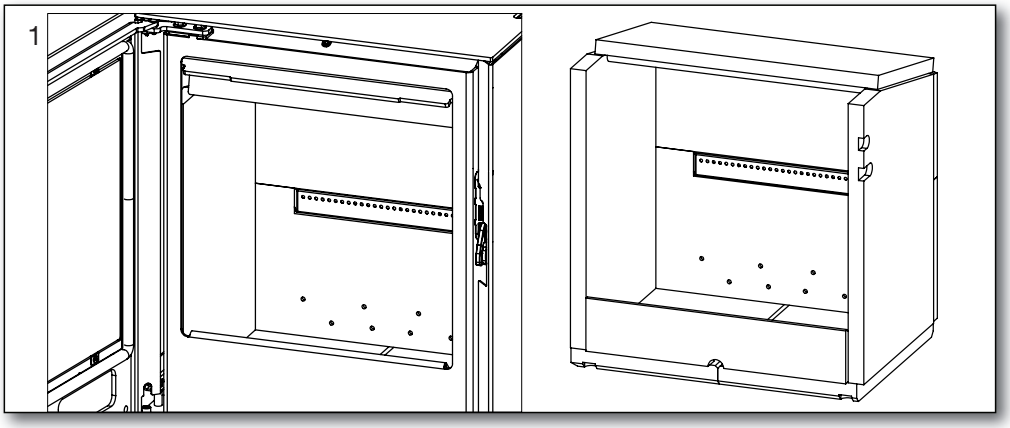

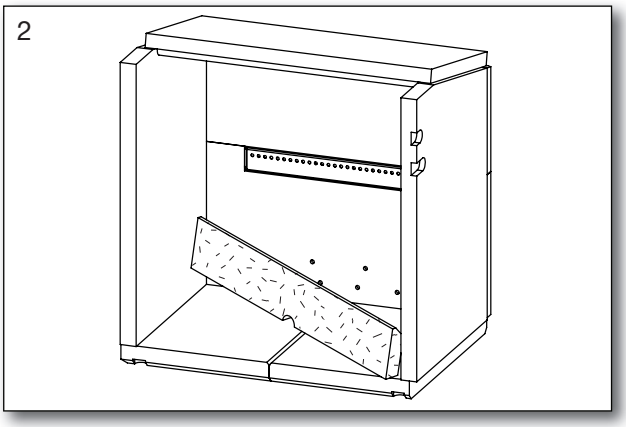

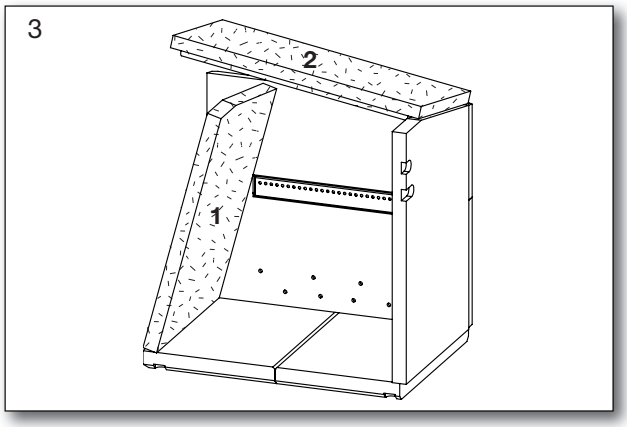

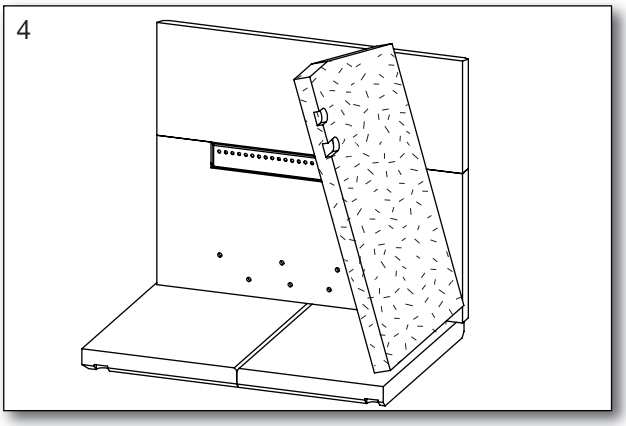

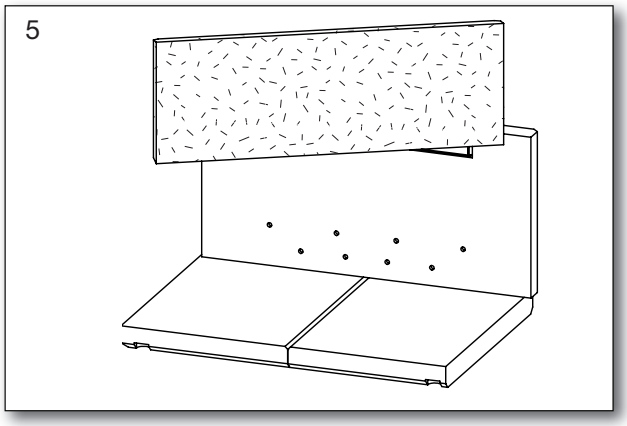

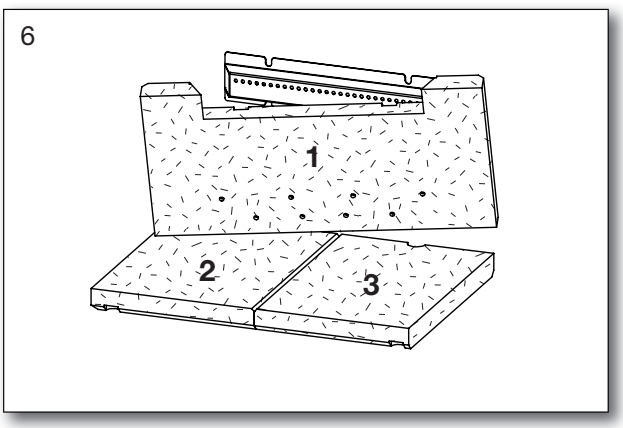

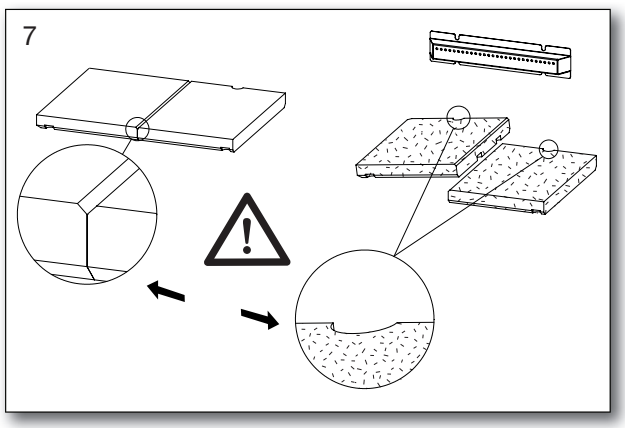

Replace in reverse order. Starting with Fig. 6.

1.21 Parts Door

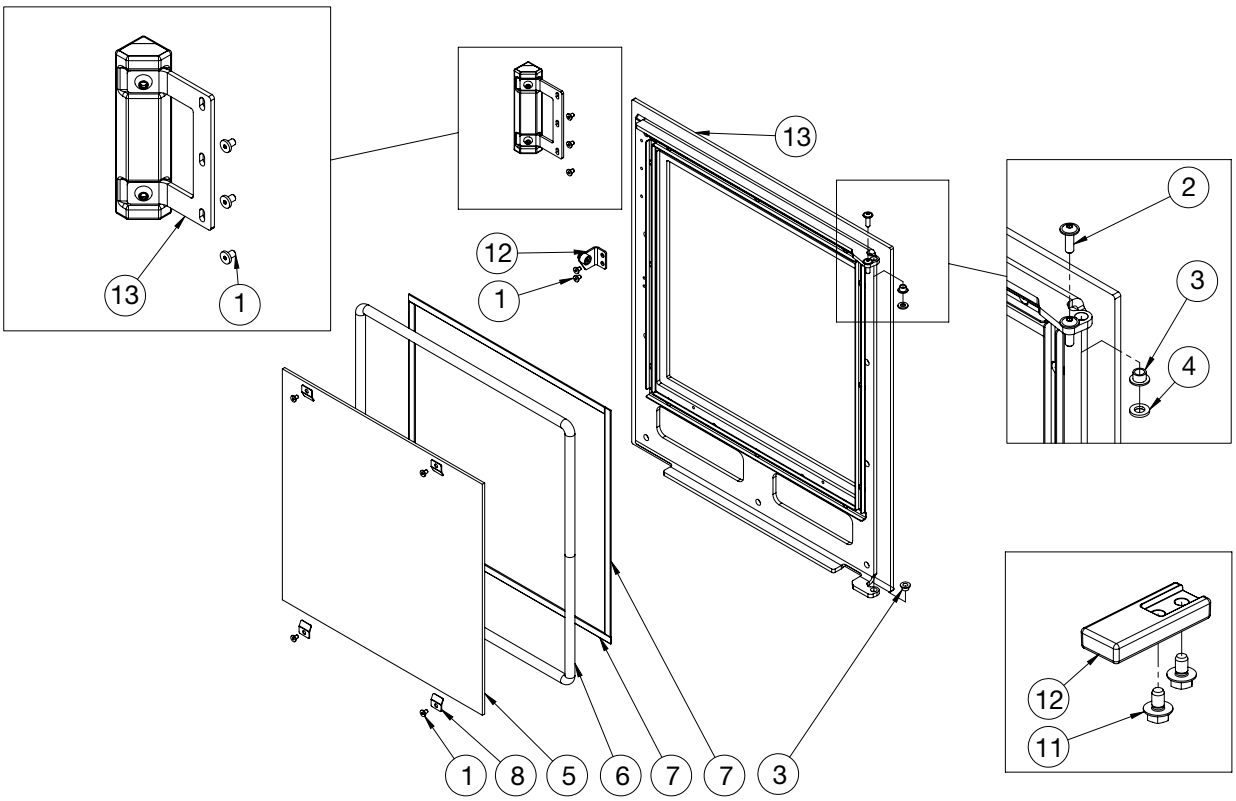

Pos. no.		Name	Qty
1	0008-1036	M4x6 Hexagon socket cap screw	9
2	0008-2055	M5x16 Hexagon socket button head	2
3	0008-030946	Bush	4
4	0008-3503	M6/12x1,6 Washer BN 560 Brass	1
5	0021-030746	Glass	1
6	0023-3008	Glass gasket L=1,54 m ø12	1
7	0023-3010	Textile glass 6 mm with adhesive black	4

L = 0.334

Pos. no.		Name	Qty
8	1013-0432	Glass clips, small	4
9	6000-030745	Shutter roller	1
10	6000-031743	Door, complete	1
11	0008-0212	M6x10 Hexagon locking screw	2
12	0030-030958	Air control handle	1
13	6000-031892	Handle	1

Inside fire chamber

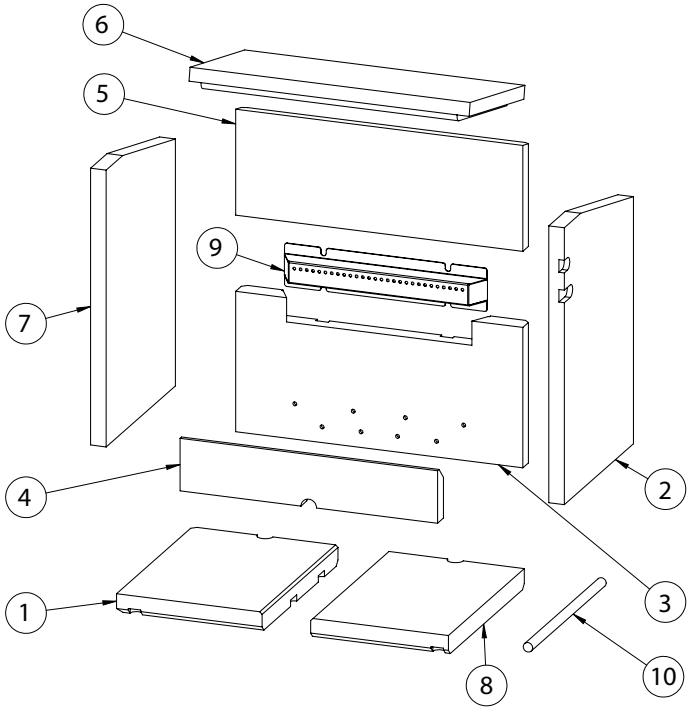

Pos. no.		Name	Qty
1	0023-030997	Bottom stone, left	1
2	0023-030998	Side stone, right	1
3	0023-030999	Back stone, bottom	1
4	0023-031000	Front stone	1
5	0023-031001	Back stone, top	1
6	0023-031002	Baffle	1
7	0023-031285	Side stone, left	1
8	0023-031467	Bottom stone, right	1
9	1011-0137	Tertiary nozzle	1
10	0023-3008	Glass cord ø12 mm L = 0.25 m	1

Installation Instructions
Contents

2. Installation instructions 15
2.1 Distance requirements 15
2.2 Floor 15
2.3 Chimney connection 15
2.4 Combustion air and ventilation 16
2.5 Stove drawings/measurments 16-18
2.6 Connecting direct air - behind 18
2.7 Clearances for installation 19-21

Appendix A 22

EU Declaration of Conformity 23

Remember

The stove and chimney installation, must comply with local regulations, including those referring to national and European standards.

2. Installation instructions

The stove installation must be in accordance with national, European and possibly local regulations. You must follow local regulations with regard to installation of chimney and connection to the chimney. We recommend that you let a professional Heta dealer install the stove. Alternatively, you can ask the local chimney sweep before installation. Be aware that it is always the owner himself who has responsibility for ensuring that applicable rules are complied with.

A modern stove places heavy demands on the chimney due to the high efficiency. It may be necessary to enhance or even replace an old chimney.

Remember

1. Always ensure free access to any cleaning doors in a chimney.
2. Always ensure ample fresh air to the room.
3. Exhaust/extraction fans in the house can reduce or create negative draft in the chimney. Reduced draft can lead to the stove having adverse combustion properties. It may result in smoke coming out of the stove when the door is open. A negative draft due to an exhaust/extraction fan can cause the chimney to work in reverse, drawing smoke into the house because of the fan.
4. Any air vents must not be covered.

2.1 Distance Provisions

There is a difference between installation next to flammable wall or non-flammable wall.

We recommend a minimum of 5 cm when installed in a non- combustible setting, to facilitate air circulation and cooling around the stove.

The minimum distance to combustibles can be found on the model plate provided with the stove or on page 9 of this manual.

2.2 Floor

You must ensure that the floor can support the weight of the stove and a top-mounted steel chimney.

In front of the fireplace insert, the substrate must consist of non-combustible material, for ex. Steel/glass plate, stone or tile floor. The size of the non-combustible surface must follow the applicable national and local regulations. Protecting your floor from embers that may fall out of the oven.

See safety distances page 19.

Pay special attention to the distance from flammable floor, which is also valid even if there are a steel, glass, stone or tile over flammable materials.

These stoves can be installed on a 12 mm non combustible hearth.

2.3 The chimney connection

The chimney opening must follow national and local regulations. However, the area of the opening should never be less than 115 cm^2, which corresponds to a diameter of 121 mm. If a damper is fitted in the flue gas pipe, there must always be at least 20 cm^2 of free passage, even when the damper is in its “closed” position.

The stove must never be connected to a chimney that is linked to a gas fire stove.

An efficient stove makes high demand on chimney properties – so always have your local chimney sweep evaluate your chimney.



Connection to a brick

Brick a thimble into the chimney ar
flue gas pipe in this.

The thimble and flue gas pipe must not penetrate the chimney opening itself, but must be flush with the inside of the chimney duct. Joins between brickwork, the thimble and flue gas pipe must be sealed with fireproof material and / or beading. Heta A/S stresses that it is of utmost importance that this is done correctly with very tight joints. As mentioned earlier, we recommend that setup and installation be left to a professional Heta dealer.

Connection to a steel chimney

The steel chimney must meet T400 at least.
When installing the chimney through the ceiling, national and local regulations must be followed regarding distances to flammable materials.

It is important that the chimney is mounted with

a roof support so that the stove's top plate does not support the chimney (the stove is approved to be able to carry 120 kg.)

2.4 Combustion air and Ventilation

The stove is approved as a room air dependent stove in accordance with EN 16510. All the combustion air in the inset stove comes from the room in which it is fitted. However, by connecting a sealed air inlet to the stove's air intake connector, the stove can be supplied with external combustion air. In this respect, the following requirements must be met:

- Only approved materials may be used from the ventilation unit to the air inlet vent.
- The air inlet vent must be fitted correctly and insulated to prevent formation of condensate. The cross section of the vent and grille must be at least 78 cm².
- If the vent leads out into the open air, please note that the grille must be fitted with suitable wind protection. There must be no risk that the grille can get clogged by leaves, etc.
- The stove has been tested with 3 m of 100 mm pipe, with 3 90 degree bends.

Ventilation

Adequate ventilation must be provided in accordance with building regulations (Doc J Oct 2010) especially when installing in newer build properties when the stove is not going to be installed to an outside air supply.

The Kube 10 has a nominal output of less than 5 kW and does not need additional ventilation in older properties where it will be ventilated by natural leakage.

Houses built after 2008 where the air leakage rate is less than than 5 m^3 / hour / m^2 then a ventilator equivalent to 550 mm^2 per kW output will be required (4.5 kW x 550 mm = 2475 mm^2) unless the stove is connected to an outside fresh air supply.

2.5 Stovedrawings/measurments

Kube 10

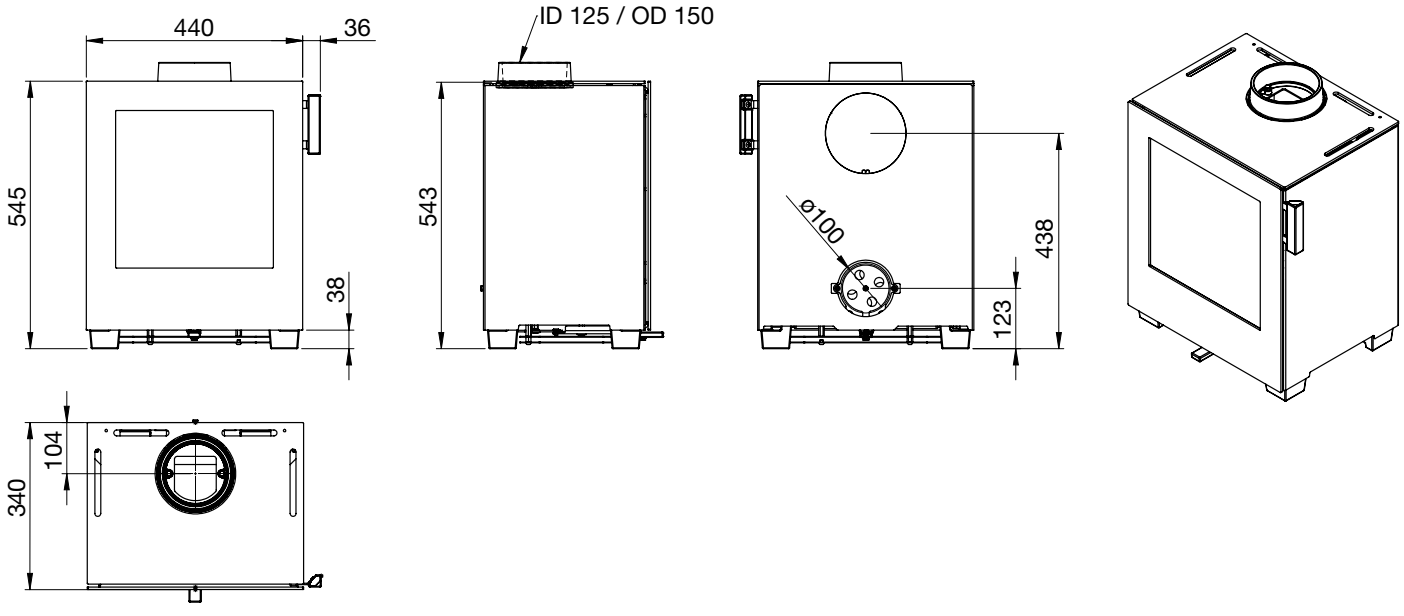

Kube 10

Classic (Accessories)

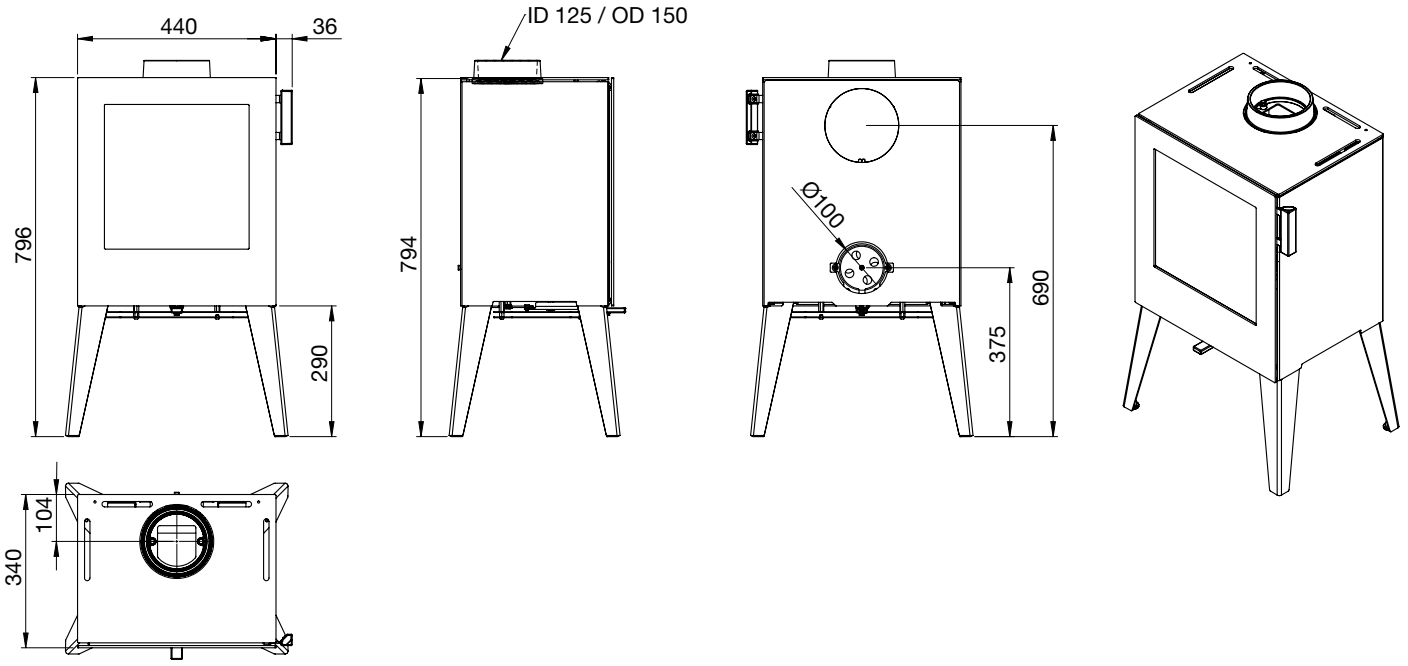

Kube 10

Modern (Accessories)

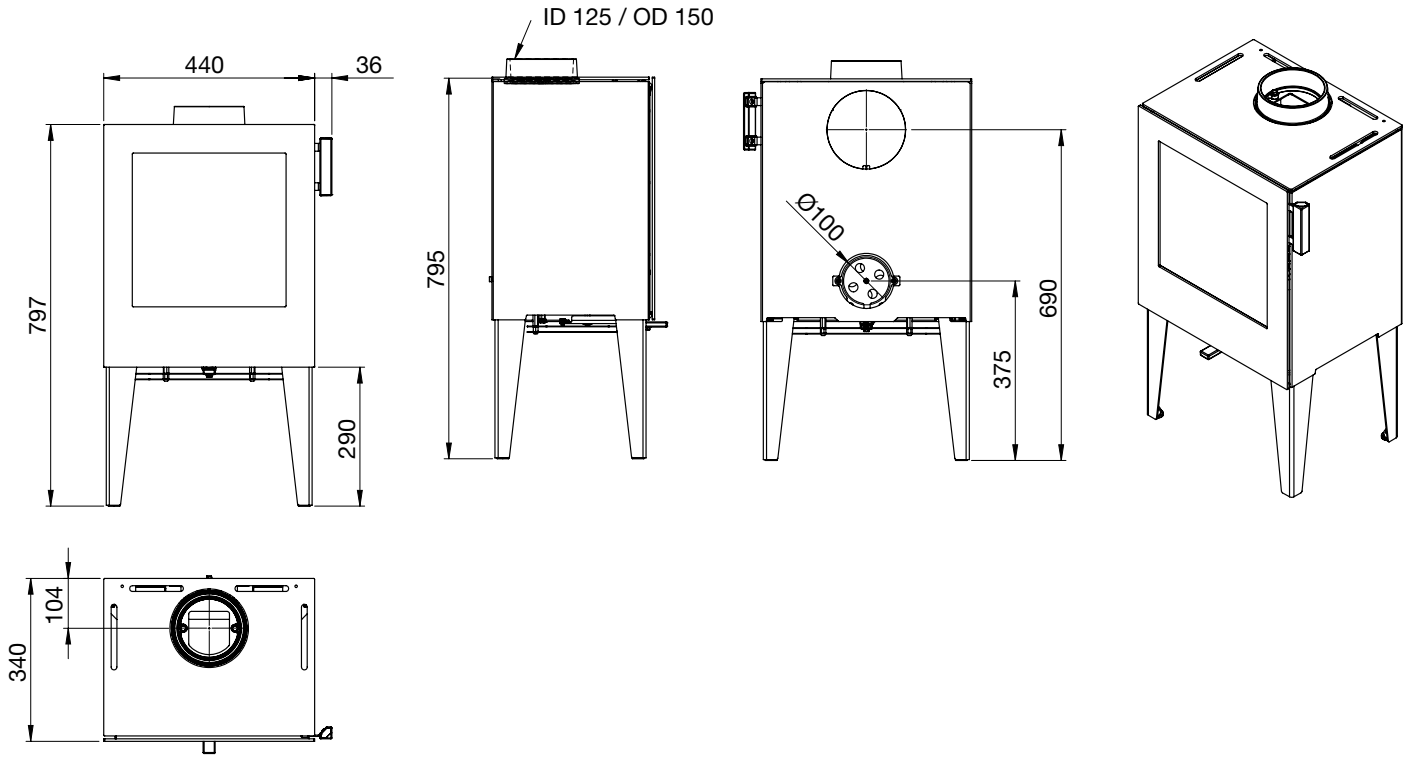

Kube 10

Log store (Accessories)

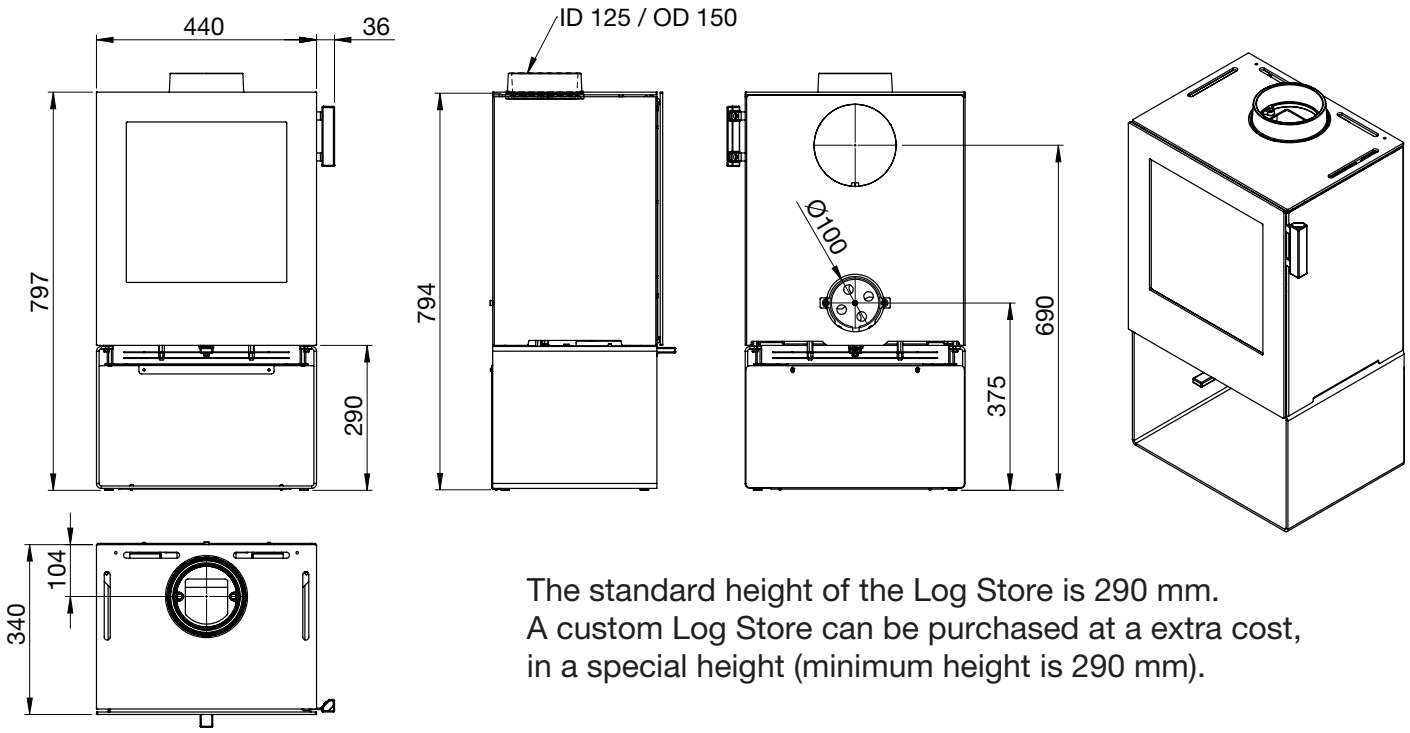

The standard height of the Log Store is 290 mm.
A custom Log Store can be purchased at a extra cost, in a special height (minimum height is 290 mm).

2.6 Connecting direct air - behind

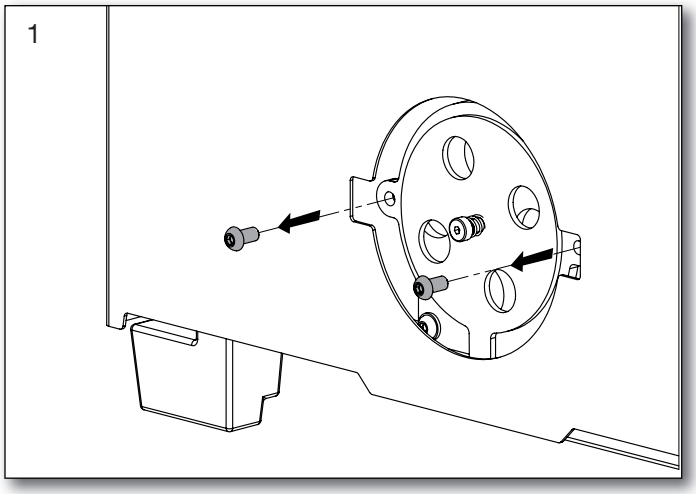

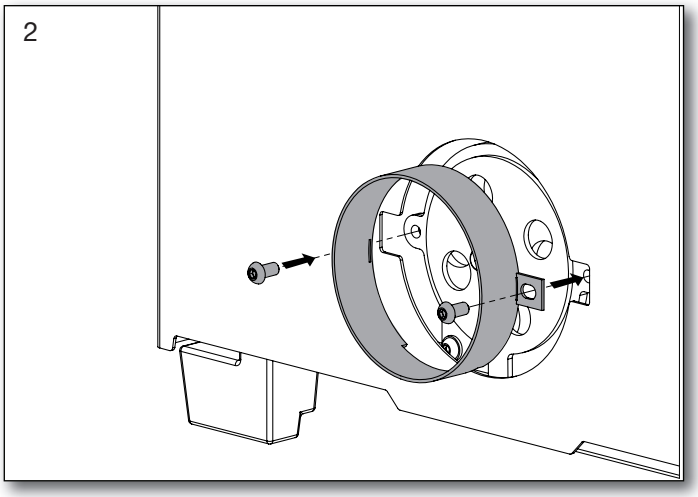

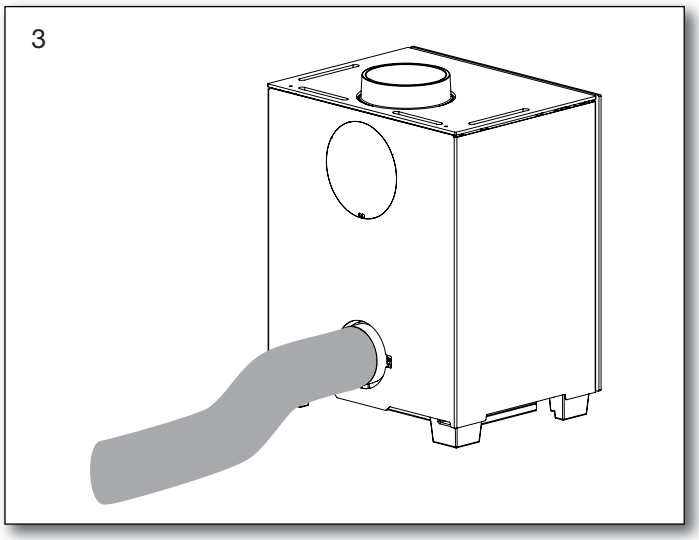

Installation of the fresh air outlet for external fresh air connection.

Flexi-pipe not included.

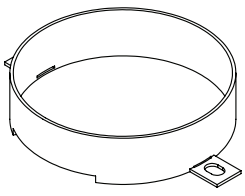

0016-029654

2.7 Clearances for installation Kube 10

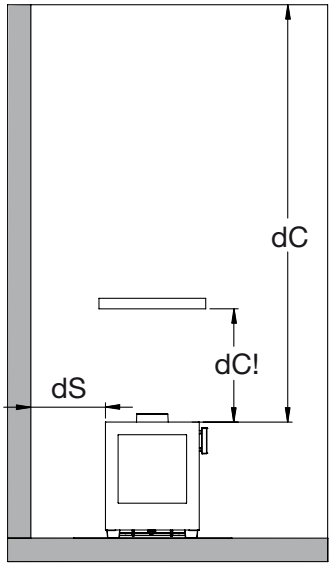

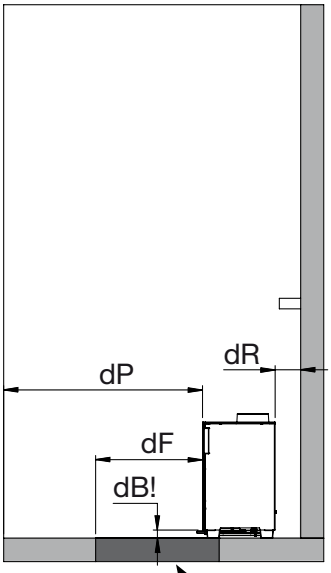

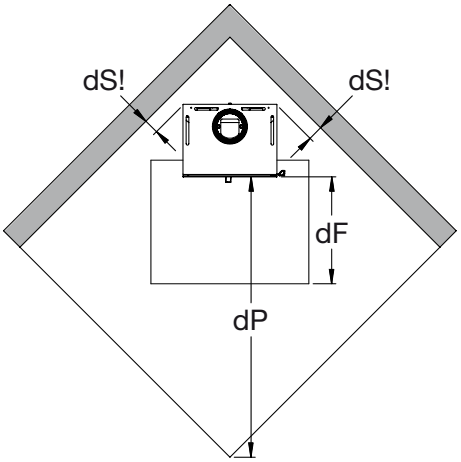

Non-flammable substrate

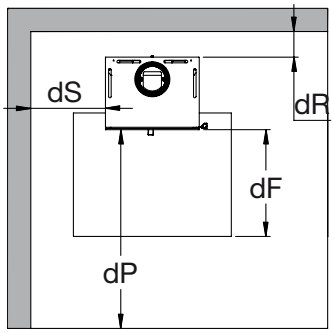

Furnitures

Combustible material

The dimensions are the minimum dimensions, unless otherwise stated.

Clearances for installation

Oventype Stove Minimum dimensions in mm	Distance to flamable materials							
	dR Rear the stove insulated / uninsulated	dS At the side insulated / uninsulated	dC! Over oven (Shelf) insulated / uninsulated	dC Over oven (Ceiling) insulated / uninsulated	dP To furnitures insulated / uninsulated	dS! Corner distance insulated / uninsulated	**dB! #** From door edge to floor	**dF #** Floor in front of stove
Kube 10	120/275	350/400	530/530	750/750	1000/1000	70/125	290	500

If the distance is lower than dB!,
there must be 500 mm (dF) in front of the stove.
The floor material must comply with the
EU Standard for fire safety A2-s1,d0.

Clearances for installation Kube 10 Classic (Accessories)

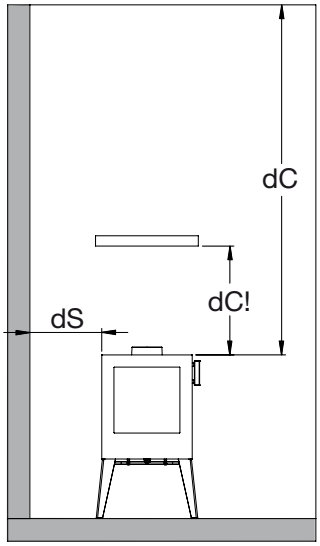

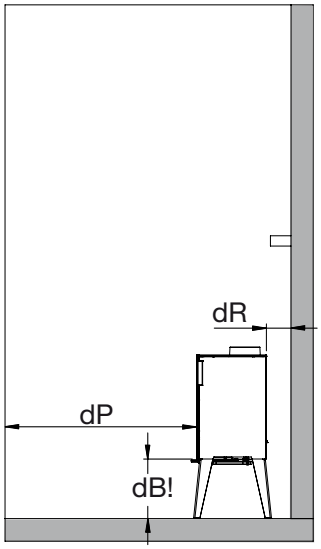

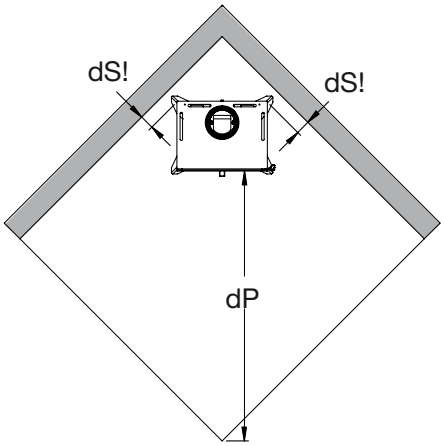

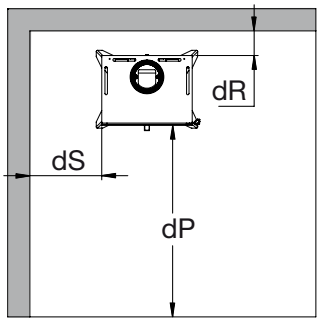

Combustible material

Clearances for installation Kube 10 Modern (Accessories)

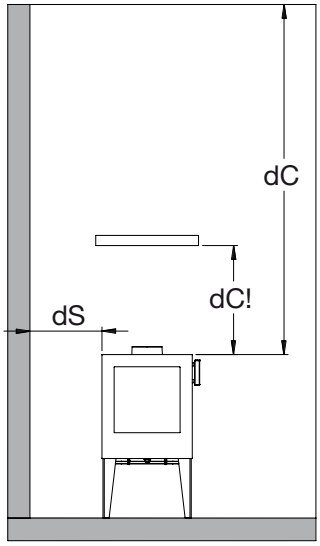

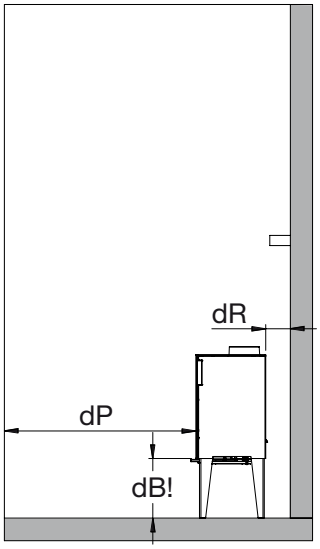

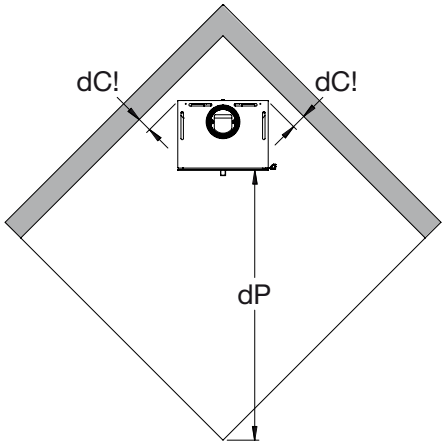

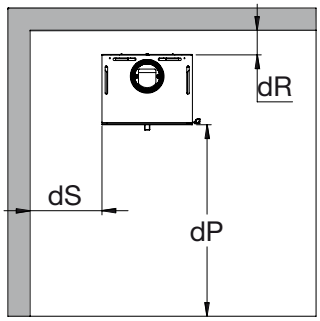

Combustible material

Clearances for installation Kube 10 log store (Accessories)

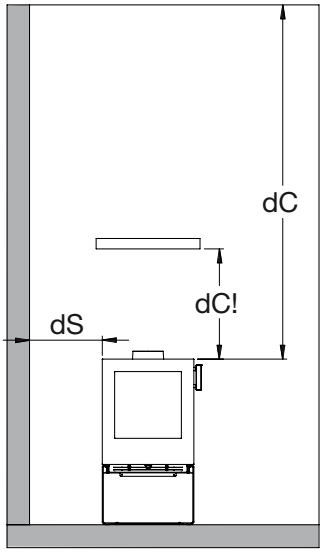

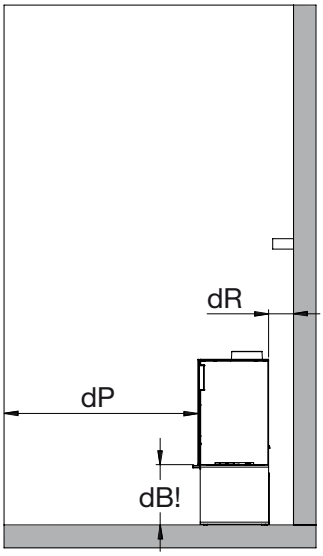

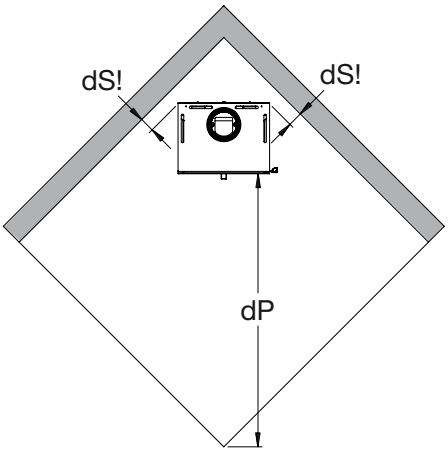

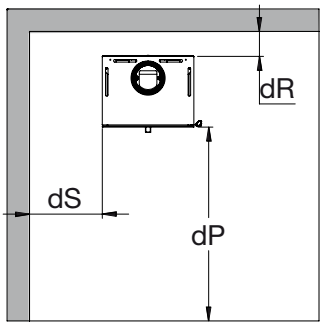

Combustible material

Appendix A

The Clean Air Act 1993 and Smoke Control Areas

Under the Clean Air Act local authorities may declare the whole or part of the district of the authority to be a smoke control area. It is an offence to emit smoke from a chimney of a building, from a furnace or from any fixed boiler if located in a designated smoke control area. It is also an offence to acquire an" unauthorized fuel" for use within a smoke control area unless it is used in an" exempt" appliance (" exempted" from the controls which generally apply in the smoke control area).

In England appliances are exempted by publication on a list by the Secretary of State in accordance with changes made to sections 20 and 21 of the Clean Air Act 1993 by section 15 of the Deregulation Act 2015. Similarly, in Scotland appliances are exempted by publication on a list by Scottish Ministers under section 50 of the Regulatory Reform (Scotland) Act 2014. In Wales and Northern Ireland these are authorized by regulations made by Welsh Ministers and by the Department of the Environment respectively.

Further information on the requirements of the Clean Air Act can be found here:
https://www.gov.uk/smoke-control-area-rules
Your local authority is responsible for implementing the Clean Air Act 1993 including designation and supervision of smoke control areas and you can contact them for details of Clean Air Act requirements

The Kube 10 has been recommended as suitable for use in smoke control areas when burning dry wood logs.

HETA

Ecodesign
EU Declaration of Conformity

DoC Kube 10 2799-2026

Product fiche

CE

Manufacturer	Heta A/S
Adress	Jupitervej 22, DK 7620 Lemvig
E-mail	heta@heta.dk
Website	www.hetaheating.com
Telephone	+45 9663 0600

Model identifier	Kube 10

The identified product described above is in conformity with:
The relevant EU harmonized regulations:
DIR 2009/125/EF
REG (EU) 2015/1185
REG (EU) 2015/1186
REG (EU) 2017/1369
REG (EU) 305/2011
The relevant harmonized standards
EN 16510-1-2022
EN 16510-2-1-2022

Characteristics when operating with the preferred fuel only		
Heat output		
Item	**Symbol**	**Value/Unit**
Nominal heat output	P_{nom}	4,0 kW
Minimum heat output	P_{min}	
Useful efficiency (NCV as received)		
Useful efficiency at nominal heat output	$\eta_{th,\ nom}$	84%
Useful efficiency at minimum heat output	$\eta_{th,\ min}$	
Auxiliary electricity consumption		
At nominal heat output	el_{max}	- kW
At minimum heat output	el_{min}	- kW
In standby mode	el_{SB}	- kW

Type of heat output/room temperature control	
single stage heat output, no room temperature control	Yes
two or more manual stages, no room temperature control	No
with electronic room temperature contro	No
with electronic room temperature control	No
with electronic room temperature control plus day timer	No
with electronic room temperature control plus week timer	No

Other control options	
room temperature control, with presence detection	No
room temperature control, with open window detection	No
with distance control option	No

Notified body relevant to the assessment and verification of constancy of performance
Danish Technological Institute, DK-8000 Aarhus No. 1235. Report no. 300-ELAB-2799-EN

Fuel	**Preferred fuel**	**Other suitable fuel**
Wood logs with moisture content ≤ 25 %	Yes	No
Compressed wood with moisture content < 12 %	No	Yes
Other woody biomass	No	No
Non-woody biomass	No	No
Anthracite and dry steam coal	No	No
Hard coke	No	No
Low temperature coke	No	No
Bituminous coal	No	No
Lignite briquettes	No	No
Peat briquettes	No	No
Blended fossil fuel briquettes	No	No
Blended biomass and fossil fuel briquettes	No	No
Other blend of biomass and solid fuel	No	No

Emissions at nominal heat output	η_s %	mg/Nm³ (13 % O_2)			
		PM	**OGC**	**CO**	**NO_x**
	≥ 65	≤ 40	≤ 120	≤ 1500	≤ 200
	74	18	32	515	89

Technical documentation	
Indirect heating functionality:	No
Direct heat output:	4,0 kW
Energy Efficiency Index (EEI):	EEI 112
Fluegas temperature at nominal heat output	**T 260°C**
Energy efficiency class	A+

Safty	
Reaction to fire	A1
Test of fire safety in connection with the burning of wood	Approved
Distance to combustible materials Rear. Without insulation / with insulation (dR) Sides distance to combustible materials (dS) Furniture distance (dP)	Minimum distances in mm 275/120 400/350 1000/1000

Signed on behalf the manufacturer of **12.06.2026**

HETA
Jupitervej 22, DK-7620 Lemvig
TLF: +45 96 63 06 00
Martin Bach

The chimney sweep's signature Date_____

_____
Signature